Rev122618

HYDRODEFENSE

Flood Plank Wall System

PS Flood Barriers™
Solutions That Hold Water

Installation Instructions/Operation and Maintenance Manual

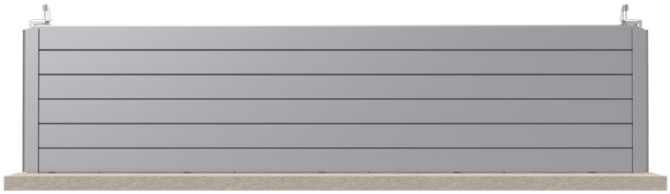

Models:
FP-535

Table of Contents:

Safety Precautions 2
Product Information 2
Sill Installation 4
Permanent Jamb Installation 6
Permanent Jamb Parts List 6
Removable Jamb Installation 10
Removable Jamb Parts List 10
Flood Plank Installation 14
Inspection and Maintenance 18
Warranty Registration Form 21

Contact Information

Mail
PS Flood Barriers
1150 South 48th Street
Grand Forks, ND 58201

Local Phone
701.746.4519

Toll Free Phone
877.446.1519

Website
psfloodbarriers.com

Email
4psinfo@psindustries.com

Hours of Operation
8 A.M. to 5 P.M. CT
Monday – Friday

IMPORTANT! Read entire Instruction and Operations Manual to become familiar with the product.

NOTICE This product is a flood protection product. The effectiveness of the product is directly related to the proper installation and operation of this product. Failure to properly maintain this product ***will*** affect performance.

Publication Notice

This manual has been compiled and published covering the latest product descriptions and specifications.

The contents of this manual and the specifications of this product are subject to change without notice.

PS Flood Barriers reserves the right to make changes without notice in the specifications and materials contained herein and shall not be responsible for any damages (including consequential) caused by reliance on the materials presented, including but not limited to typographical and other errors relating to the publication.

PS Flood Barriers and/or its respective suppliers may make improvements and/or changes in the product(s)/service(s) offered and/or the program(s) at any time without notice.

Retain this manual for future reference.
If you would like to download a copy of this manual, please go to psfloodbarriers.com

PS INDUSTRIES™ INCORPORATED

© PS INDUSTRIES INCORPORATED 2018. All Rights Reserved.

Safety Precautions

The following icons are used throughout this Manual.

⚠ **DANGER** Indicates an imminently hazardous situation which, if not avoided, will result in death or serious injury.
⚠ **WARNING** Indicates a potentially hazardous situation which, if not avoided, could result in death or serious injury.
⚠ **CAUTION** Indicates a potentially hazardous situation which, if not avoided, may result in minor or moderated injury.
NOTICE Indicates manufacturer's statement of additional information.
IMPORTANT! Indicates a required action.
CRITICAL Indicates a vital component to product performance.

Product Information

NOTICE Unauthorized modification of or to the Product voids this Limited Warranty. Authorized modifications, received in writing from PS INDUSTRIES INCORPORATED, as long as the modification is accomplished in strict accordance with PS INDUSTRIES INCORPORATED's instructions, does not void warranty. To request product modifications contact PS INDUSTRIES INCORPORATED, 1150 S. 48th Street, Grand Forks, ND 58201, phone 877-446-1519, email: 4psinfo@psindustries.com

I. General Information

This manual contains information regarding operation and maintenance of custom water-resistant Flood Plank Wall System assemblies.

II. Operation Guidelines

The following procedures and information are supplied for the operation of the PS Flood Barriers' FP-535 Flood Plank Wall System assemblies. Operation in a manner other than intended could result in damage or less than acceptable performance at time of need, for which the manufacturer will not be held responsible.

⚠ **CAUTION** Always plan for potential leakage and condensation that can occur during flooding conditions.

⚠ **WARNING** The Flood Plank Wall System components MAY BE heavy, consult Approved for Construction and included documents for weights and use appropriate lifting procedures and equipment.

III. Safety Precautions

A. Do not force planks or components if they do not operate freely.
B. When removing Flood Plank Wall System components, protect all gaskets and hardware. Always consult original Approved for Construction drawings for all installation dimensions, details, hardware and specifications.

IV. Pre-flooding or Potential Flooding Conditions

A. Conduct Inspection and Maintenance activities as described in this Operation and Maintenance Manual, at a minimum, annually and seasonally if seasonal flood conditions exist, prior to the flood season. This may require the replacement of gaskets, sealants, anchors, and accounting for all of the latching devices.
B. Ensure FP-535, Flood Plank Wall System is located near the required area for placement when needed, and is deployed prior to flooding conditions.

V. Flooding Conditions

A. Ensure FP-535, Flood Plank Wall System is fully deployed and latched when flooding conditions are present.
B. If feasible, inspect FP-535, Flood Plank Wall System for leakage or condensation accumulation during flooding.

⚠ **WARNING** THIS IS A FLOOD PROTECTION BARRIER; NEVER UNLATCH OR DISASSEMBLE DURING ANY FLOOD CONDITIONS AS WATER LEAKAGE WILL OCCUR AND YOU MAY NOT BE ABLE TO RESEAL THE BARRIER.

© PS INDUSTRIES INCORPORATED 2018. All Rights Reserved.

Product Information

The PS Flood Barriers' FP-535 is a specially designed Flood Plank Wall System capable of providing flood protection. The Model FP-535 is specifically manufactured to meet the opening dimensions and Water Protective Height (WPH) of each customers' specific site requirements. **DUE TO THE CUSTOM NATURE OF EACH FP-535 THEY DO NOT ALL LOOK THE SAME NOR LATCH OR OPERATE EXACTLY THE SAME. REFER TO THIS DOCUMENT AND APPROVED FOR CONSTRUCTION DRAWINGS FOR YOUR SPECIFIC INSTALLATION AND OPERATION.**

Please keep these instructions and Approved for Construction Drawings for later reference and read them before attempting any maintenance or deployment of the product.

NOTICE Additional Information

1. Except as otherwise indicated, requirement for flood barriers, terminology, tolerances, standards or performance and workmanship are those specified as Type 2 Closures in Chapter 7, Section 701.2 of the US Army Corps of Engineers, EP 1165-2-314, 15 December 1995.

2. These Type 2 Flood Closures/Barriers shall form essentially dry barriers or seals, allowing only slight seepage during the hydrostatic pressure conditions of flooding to the Regulatory Flood Datum (RFD) or the Design Flood Elevation (DFE.) Seepage amounts will vary with conditions encountered. This issue should be addressed by the design professional and usage of sump or bilge type pumps should be used to off set potential water build up.

3. Refer to Approved for Construction drawings for all included loading.

4. All water pressure, impact, and operating loads are transferred to the building structure. Building structure design and capacity to accept loads from flood barriers, as well as, evaluation of loads to structure is by others, not PS Flood Barriers.

5. If the water height exceeds the level of the designed Water Protective Height (WPH), excessive leakage will occur.

6. This product is equipped with compressible seals, which are not dependent on inflation devices.

7. PS Flood Barriers recommends a flood preparedness plan be developed and implemented. An annual training drill for activation prior to potential flooding conditions is recommended.

© PS INDUSTRIES INCORPORATED 2018. All Rights Reserved.

Sill Installation

VI. Sill Installation

NOTICE Only use Approved for Construction Drawings.

IMPORTANT! Follow Anchor Manufacturer's technical data manual/installation instructions for installation requirements and proper installation procedures.

STEP 1. Review all Approved for Construction drawings sent with the crated Flood Plank Wall System. The Approved for Construction Drawings are located inside a plastic bag inside the crate. Review all installation labels prior to installation.

STEP 2. Determine Sill type and exact placement as called out on Approved for Construction Drawings. All sealing surfaces must be sound, flat/level, and without blemish for best performance. Permissible tolerance is +/- $^{1}/_{16}$" per 10 foot length.

Embedded Sill Angle

STEP 3. Installation of Embedded Sill Angle

a. Place Sill according to Approved for Construction Drawings.

b. Grout, in accordance with grout mfg. instructions. Place embedded sill angle, level into concrete, keeping flush with concrete surface.

IMPORTANT! Allow grout to fully set before proceeding with Flood Plank Wall System installation.

Step 3 Illustration A

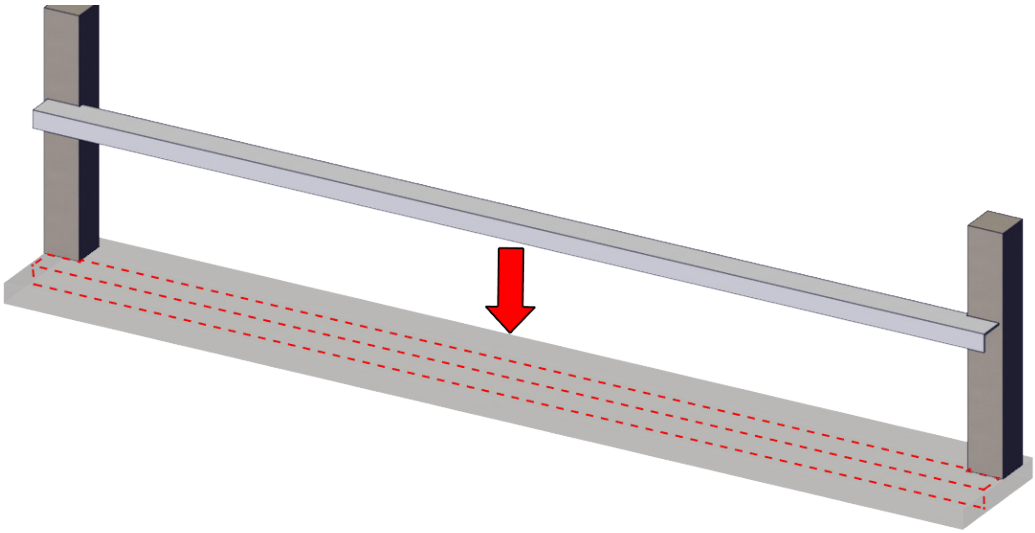

Step 3 Illustration B

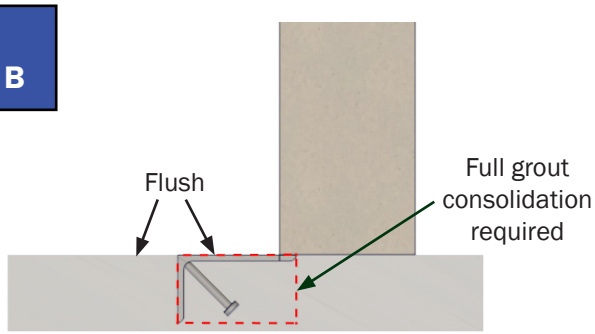

© PS INDUSTRIES INCORPORATED 2018. All Rights Reserved.

Sill Installation

Flat Surface Mounted Sill

STEP 3. Installation of Flat Surface Mounted Sill

a. Place Sill according to Approved for Construction Drawings and mark anchor holes with sill in place.

b. Set Sill aside and drill anchor hole diameter as required per included Anchor Specifications; refer to anchor manufacturer's technical data manual for installation limitations and requirements.

c. Remove all dust and debris from the anchor holes, refer to anchor mfg. instructions.

d. Place Sill in a continuous bed of urethane sealant, before anchoring, to create a watertight joint. Ensure urethane placement extends to the Sill ends and contacts the adjacent wall structure.

IMPORTANT! Sill orientation must match Approved for Construction drawings to ensure gaskets have a smooth, flat, and level surface. Shimming and/or concrete grinding may be required to ensure level sill +/- 1/16" per 10 foot length.

Step 3 Illustration C

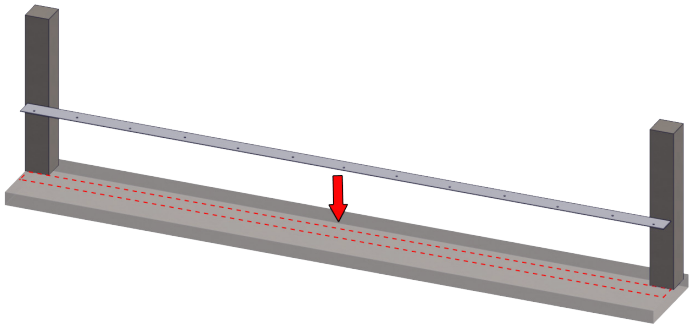

Step 3 Illustration D

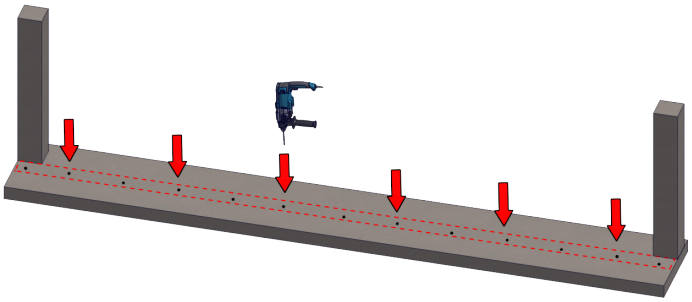

Step 3 Illustration E

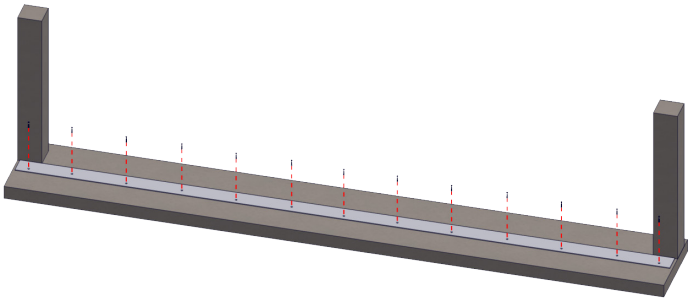

Step 3 Illustration F

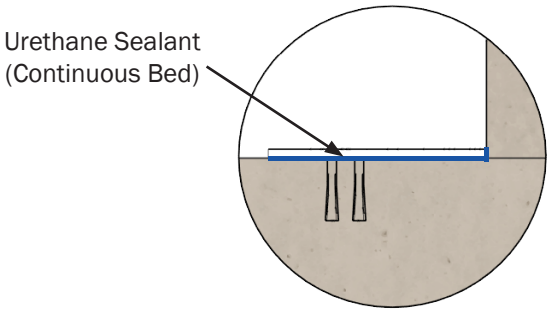

No Sill

STEP 3. No Sill installation

a. In applications where the Flood Plank Wall System gaskets contact the existing building structure, floors, etc. all surfaces must be sound, flat/level, and without blemish for best performance. Floor cracks and expansion joints will cause extreme leakage. Permissible floor tolerance is +/- 1/16" per 10 foot length.

© PS INDUSTRIES INCORPORATED 2018. All Rights Reserved.

Permanent Jamb Installation

Parts List

VII. Permanent Jamb Parts List

NOTE 1. Left and Right Jamb assemblies are shipped fully assembled. Diagram is for part identification only.

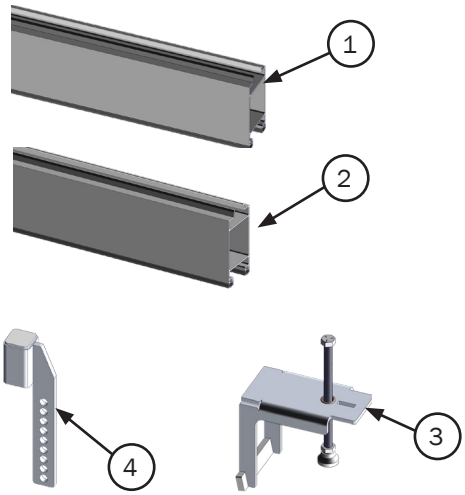

PERMANENT JAMB PARTS LIST			
ITEM #	DESCRIPTION	QTY	PART #
1	FP;BOTTOM PLANK-ALUM	1	BOT P
2	FP;INTER PLANK -ALUM	*	INT P
3	FP535;PLANK LATCH ASSEMBLY (5")	2	514209
4	FP535;PLANK LATCH LOCK	2	514210
5	JAMB FASTENERS **	*	**
6	FP;LEFT SIDE JAMB ASSY **	2	JMBASMLH
7	FP;RIGHT SIDE JAMB ASSY **	2	JMBASMRH
8	FP;SILL ASM **	1	SILL ASM
9	SEALANT; POLYURETHANE, GRAY	2	509809
10	SEALANT; SWELL PASTE TYPEE 10OZ	1	500507

*Refer to Approved for Construction Drawings for quantity.
**Refer to Approved for Construction Drawings for type.

TO ORDER PARTS CONTACT PS FLOOD BARRIERS AT 877.446.1519 or 4psinfo@psindustries.com

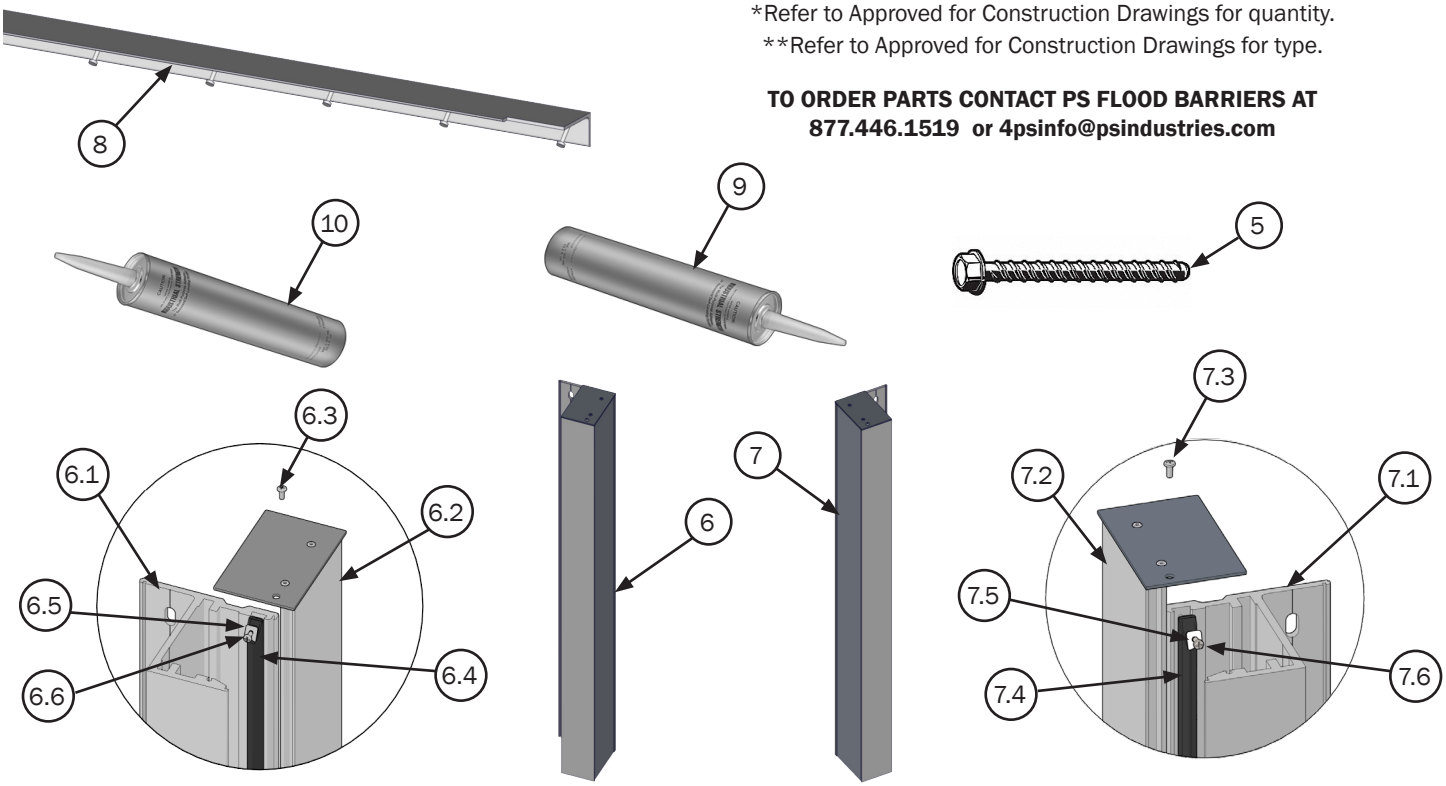

LEFT JAMB PARTS LIST			
ITEM #	DESCRIPTION	QTY	PART #
6.1	LEFT JAMB MOUNT EXTRUSION	1	JMBCHNLH
6.2	FP;JAMB COVER	1	JMBCVRLH
6.3	SCREW;PANPHMACH12-24X1/2ZN	1	509647
6.4	FP;JAMB GASKET	1	513486
6.5	FP; GASKET RET. WASHER	1	509109
6.6	SCREW;PANPHMACH10-24X3/8ZN	1	501514

RIGHT JAMB PARTS LIST			
ITEM #	DESCRIPTION	QTY	PART #
7.1	RIGHT JAMB MOUNT EXTRUSION	1	JMBCHNRH
7.2	FP;JAMB COVER	1	JMBCVRRH
7.3	SCREW;PANPHMACH12-24X1/2ZN	1	509647
7.4	FP;JAMB GASKET	1	513486
7.5	FP; GASKET RET. WASHER	1	509109
7.6	SCREW;PANPHMACH10-24X3/8ZN	1	501514

© PS INDUSTRIES INCORPORATED 2018. All Rights Reserved.

Permanent Jamb Installation

Face Mount Jamb

VIII. Permanent Face Mount Jamb Installation

IMPORTANT! Follow Anchor Manufacturer's technical data manual/installation instructions for installation requirements and proper installation procedures.

STEP 1. Remove cover assembly from jambs.

Step 1 Illustration

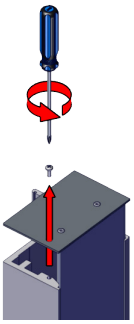

STEP 2. After proper sill installation.

a. Measure and set jamb (label on back of jamb) against wall and plumb, reference from edge of opening to center of anchor holes.
Required Anchor edge distances specified in Approved for Construction Drawings.

b. Mark anchor hole locations from jamb onto existing structure.

Step 2 Illustration A

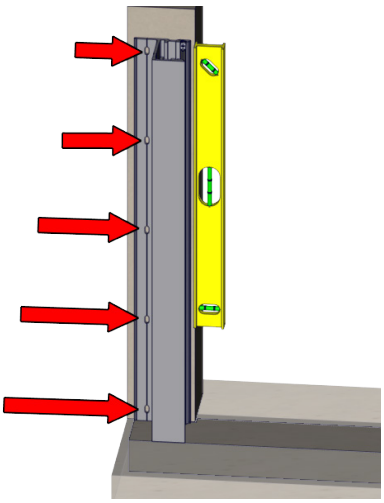

Step 2 Illustration B

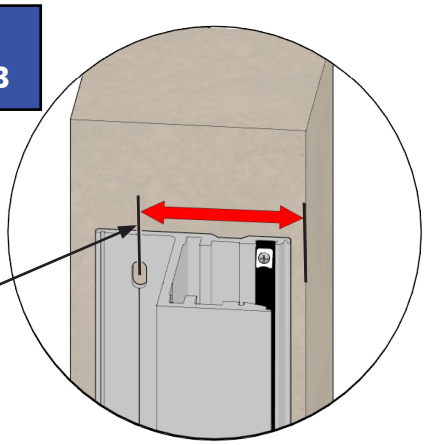

STEP 3. Set jamb aside and drill holes; drill bit diameter as required per included Anchor Manufacturer's technical manual.

Step 3 Illustration

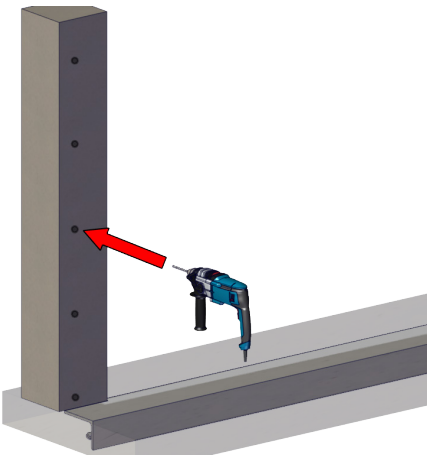

© PS INDUSTRIES INCORPORATED 2018. All Rights Reserved.

Permanent Jamb Installation

Face Mount Jamb

STEP 4. Remove all dust and debris from anchor holes per included Anchor Manufacturer's technical manual.

STEP 5. Before placing jamb against existing structure.

a. Apply 1/8" bead of swell paste (full height), centered on back side of jamb on ribs. (See Illustration A)

b. Set base of jamb in a continuous bed of urethane sealant to create a watertight joint. Ensure wall is flat, smooth, and free of cracks and defects to create a watertight seal with the wall and floor.

NOTICE Use care when applying sealants to keep work area clean.

Step 5 Illustration A

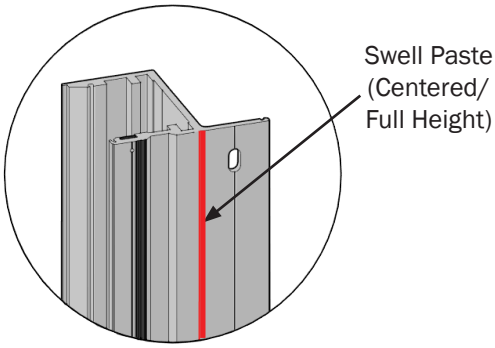

Step 5 Illustration B

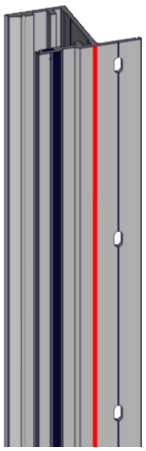

Step 5 Illustration C

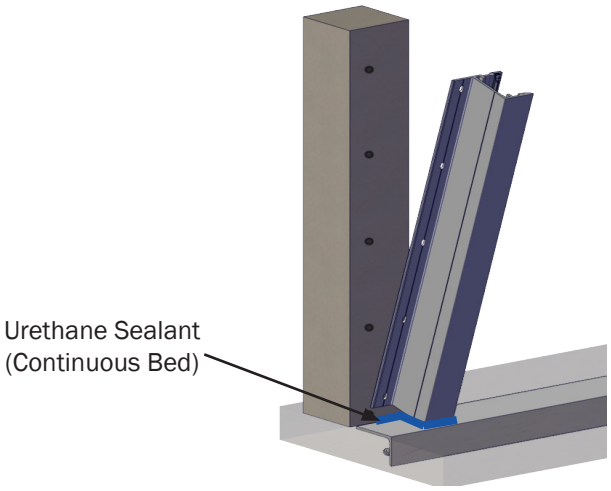

STEP 6. Set jamb in place

a. Anchor to existing structure. Do not exceed torque per included Anchor Manufacturer's technical manual.
*Torque wrench supplied by others, NOT PS Flood Barriers.

Step 6 Illustration

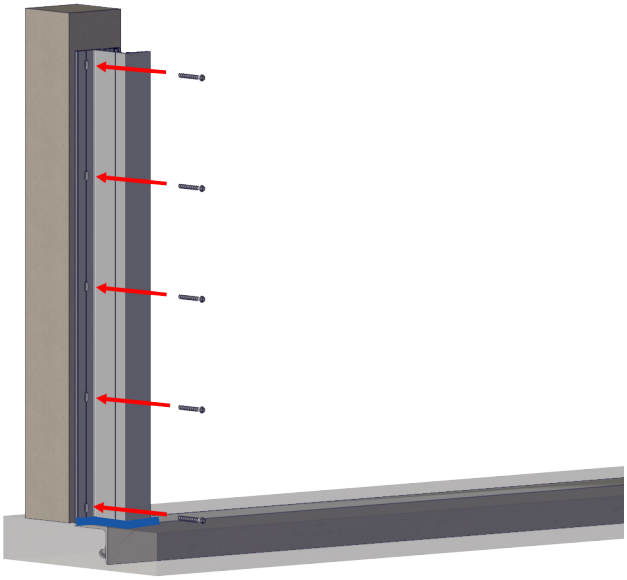

© PS INDUSTRIES INCORPORATED 2018. All Rights Reserved.

Permanent Jamb Installation

Face Mount Jamb

STEP 7. Apply urethane sealant to each side of jamb (full height) against existing structure and bottom of jamb (full perimeter) to create a watertight joint.

a. Clean-up excess sealant that could prevent the bottom flood plank gasket from sealing to the sill.

Step 7 Illustration

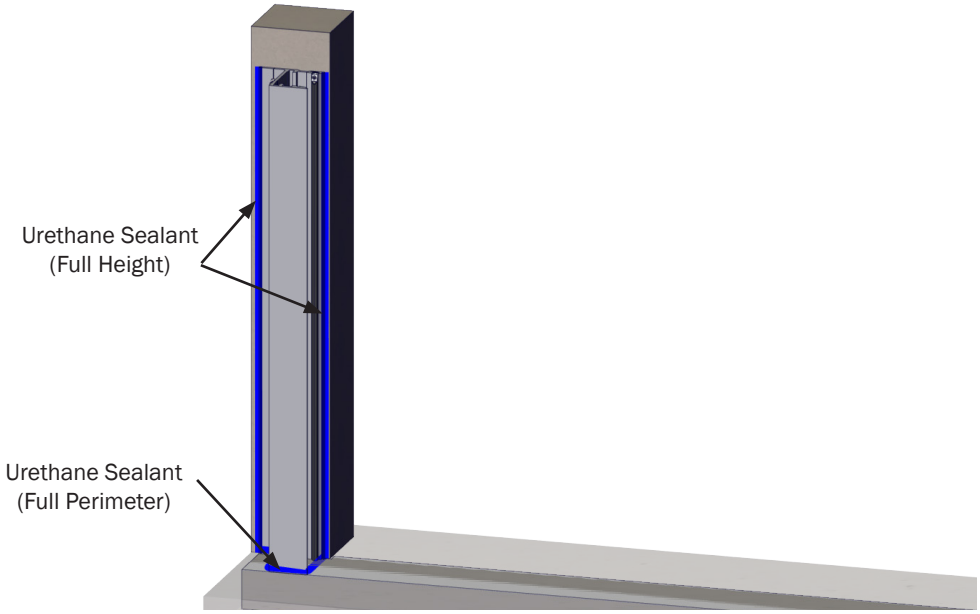

STEP 8. Installation of second jamb

a. Measure from installed jamb to locate second jamb, as shown in Illustration.

b. Repeat Steps 1 through Steps 7 for opposite Jamb. See Approved for Construction Drawings for dimensions.

Step 8 Illustration

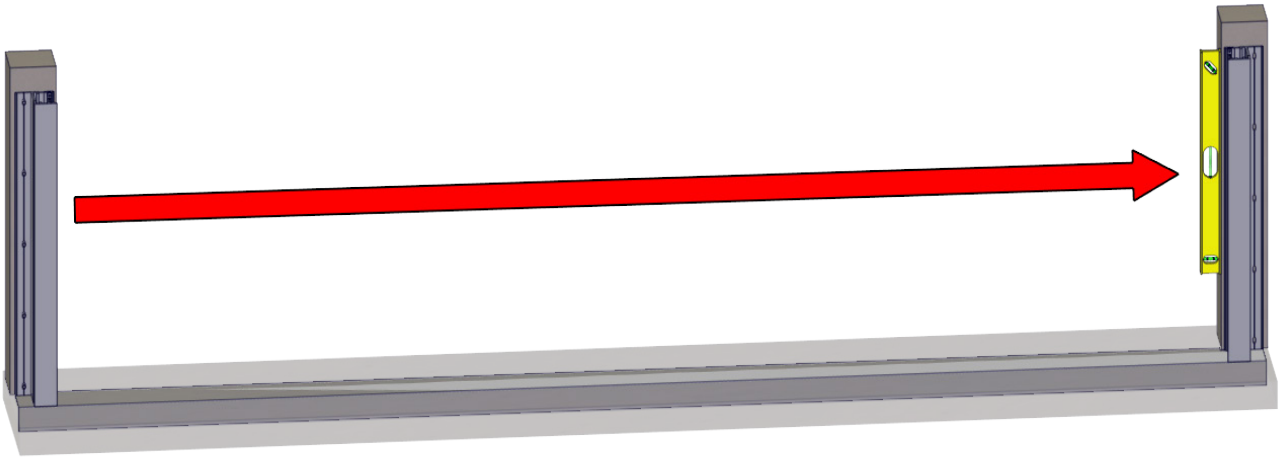

NOTICE PS Flood Barriers recommends completing installation steps fully, testing, and completing a Training Drill for activation prior to storage of Flood Barrier System.

© PS INDUSTRIES INCORPORATED 2018. All Rights Reserved.

Removable Jamb Installation

Parts List

IX. Removable Jamb Parts List

NOTE 1. Left and Right Jamb assemblies are shipped fully assembled. Diagram is for part identification only.

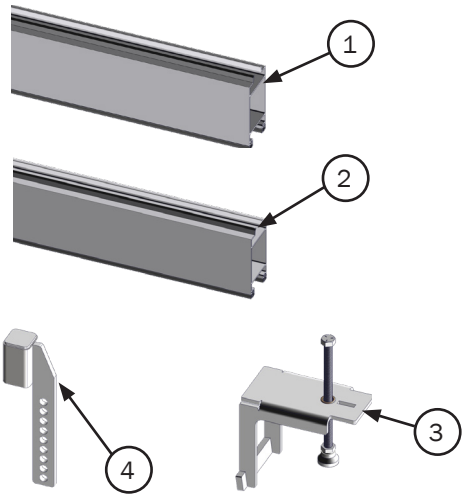

REMOVABLE JAMB PARTS LIST			
ITEM #	DESCRIPTION	QTY	PART #
1	FP;BOTTOM PLANK-ALUM	1	BOT P
2	FP;INTER PLANK -ALUM	*	INT P
3	FP535;PLANK LATCH ASSEMBLY (5")	2	514209
4	FP535;PLANK LATCH LOCK	2	514210
5	FP;LEFT SIDE JAMB ASSY **	2	JMBASMLH
6	FP;RIGHT SIDE JAMB ASSY **	2	JMBASMRH
7	FP;SILL ASM **	1	SILL ASM
8	WS;SEALANT;REMOVABLE	2	512654
9	JAMB ANCHOR SYSTEMS **	*	**

*Refer to Approved for Construction Drawings for quantity.
**Refer to Approved for Construction Drawings for type.

TO ORDER PARTS CONTACT PS FLOOD BARRIERS AT 877.446.1519 or 4psinfo@psindustries.com

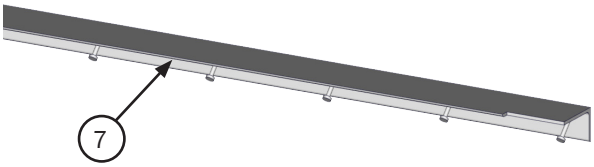

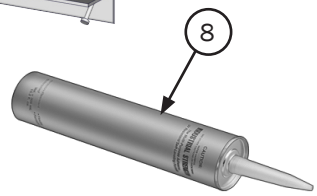

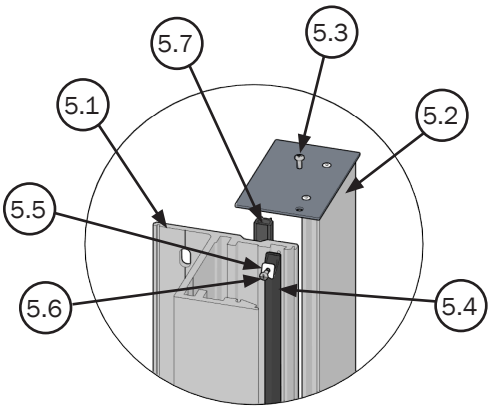

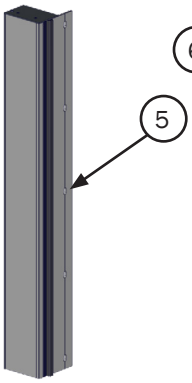

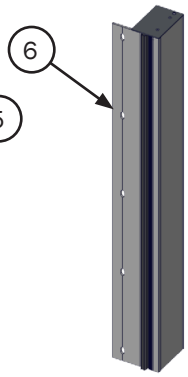

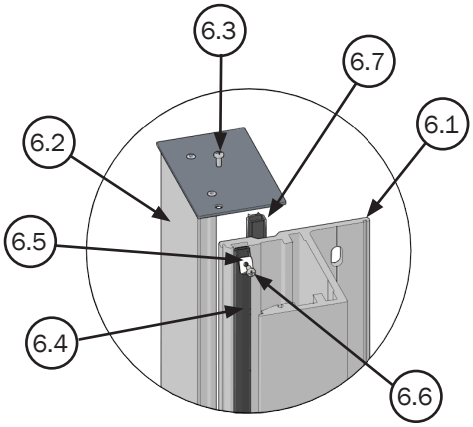

LEFT JAMB PARTS LIST			
ITEM #	DESCRIPTION	QTY	PART #
5.1	LEFT JAMB MOUNT EXTRUSION	1	JMBCHNLH
5.2	FP;JAMB COVER	1	JMBCVRLH
5.3	SCREW;PANPHMACH12-24X1/2ZN	1	509647
5.4	FP;JAMB GASKET	1	513486
5.5	FP; GASKET RET. WASHER	1	509109
5.6	SCREW;PANPHMACH10-24X3/8ZN	1	501514
5.7	FP;WALL GASKET	1	512655

RIGHT JAMB PARTS LIST			
ITEM #	DESCRIPTION	QTY	PART #
6.1	RIGHT JAMB MOUNT EXTRUSION	1	JMBCHNRH
6.2	FP;JAMB COVER	1	JMBCVRRH
6.3	SCREW;PANPHMACH12-24X1/2ZN	1	509647
6.4	FP;JAMB GASKET	1	513486
6.5	FP; GASKET RET. WASHER	1	509109
6.6	SCREW;PANPHMACH10-24X3/8ZN	1	501514
6.7	FP;WALL GASKET	1	512655

© PS INDUSTRIES INCORPORATED 2018. All Rights Reserved.

Removable Jamb Installation

Face Mount Jamb

X. Removable Face Mount Jamb Installation

IMPORTANT! Follow Anchor Manufacturer's technical data manual/installation instructions for installation requirements and proper installation procedures.

STEP 1. Remove cover assembly from jambs.

Step 1 Illustration

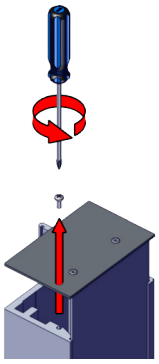

STEP 2. After proper sill installation.

a. Measure and set jamb against wall and plumb, reference from edge of opening to center of anchor holes. Required Anchor edge distances specified in Approved for Construction Drawings.

b. Mark anchor hole locations from jamb onto existing structure.

Step 2 Illustration A

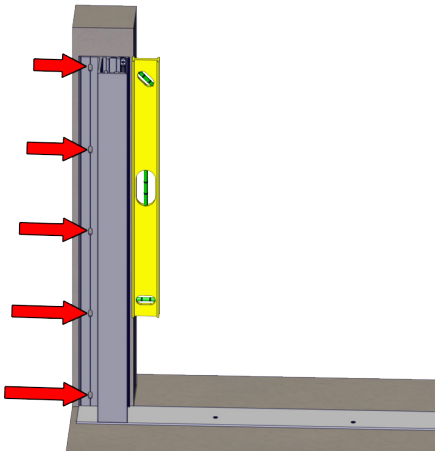

Step 2 Illustration B

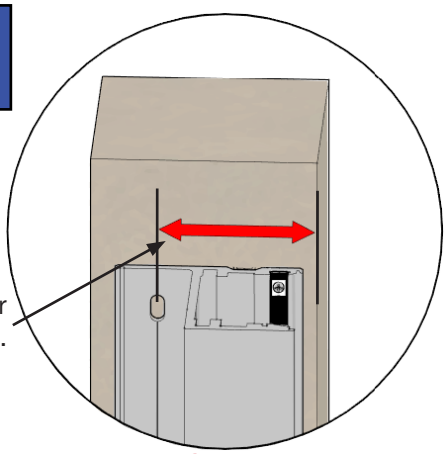

STEP 3. Set jamb aside and drill holes; drill bit diameter as required per included Anchor Manufacturer's technical manual.

Step 3 Illustration

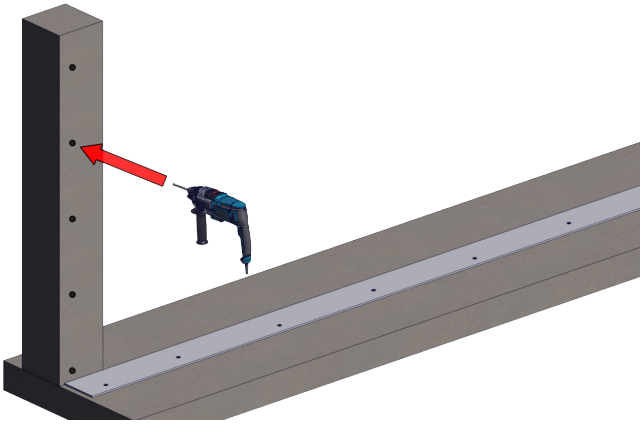

© PS INDUSTRIES INCORPORATED 2018. All Rights Reserved.

Removable Jamb Installation

Face Mount Jamb

STEP 4. Remove all dust and debris from anchor holes per included Anchor Manufacturer's technical manual.

STEP 5. Installation of internally threaded anchors. Follow Anchor Manufacturer's technical data manual/ installation instructions for installation requirements and proper installation procedures.

a. Fill anchor holes with supplied anchor epoxy before inserting post-installed internally threaded inserts. Nylon set screws (not shown) are provided for inserts when jambs are not in use.

b. Clean-up excess anchor epoxy.

IMPORTANT! Let epoxy fully set before proceeding: required time as specified per Anchor Manufacturer's technical manual.

Step 5 Illustration

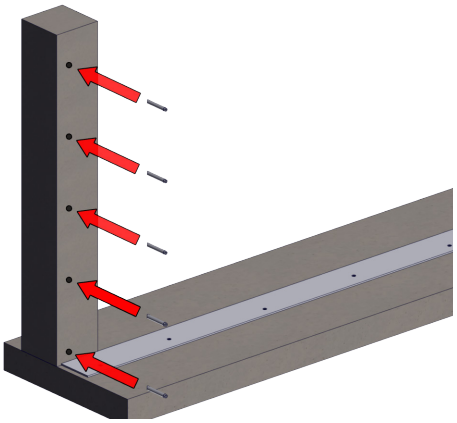

STEP 6. Before placing jamb against existing structure.

a. Set base of jamb in a continuous bed of removable sealant to create a watertight joint. Ensure wall is flat, smooth, and free of cracks and defects to allow the compression gasket (Illustration B) to create a watertight seal with the wall and floor.

Step 6 Illustration A

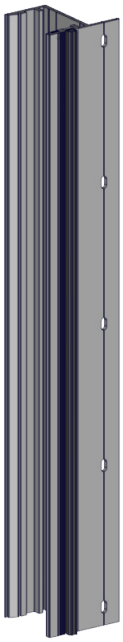

Step 6 Illustration B

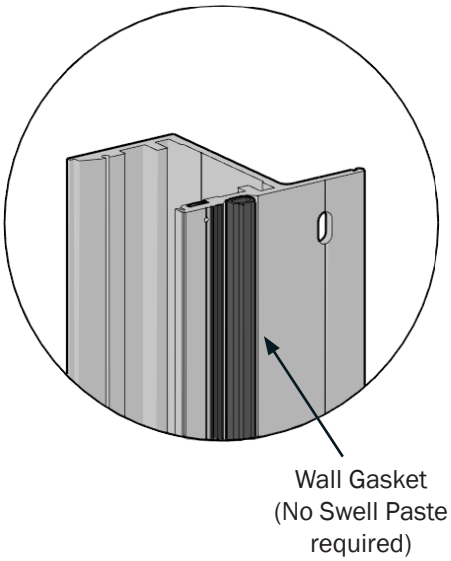

Step 6 Illustration C

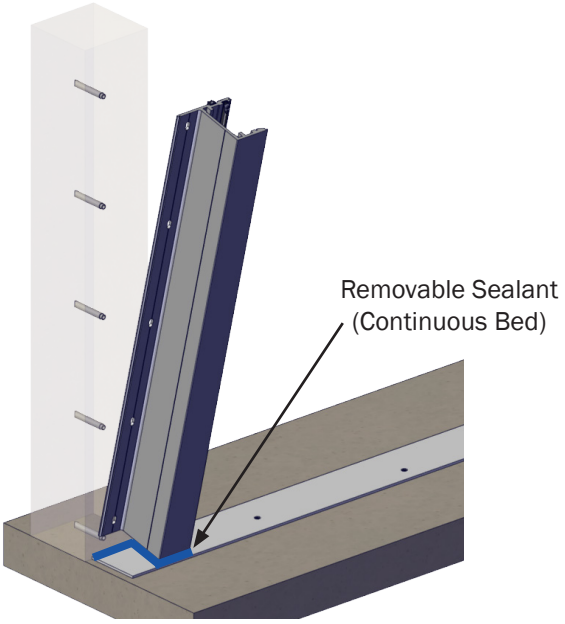

© PS INDUSTRIES INCORPORATED 2018. All Rights Reserved.

Removable Jamb Installation

Face Mount Jamb

STEP 7. Set jamb in place

a. Completely thread-in supplied bolts into post-installed thread inserts. Do not exceed torque per Anchor Manufacturer's technical manual.

*Torque wrench supplied by others, NOT PS Flood Barriers.

Step 7 Illustration

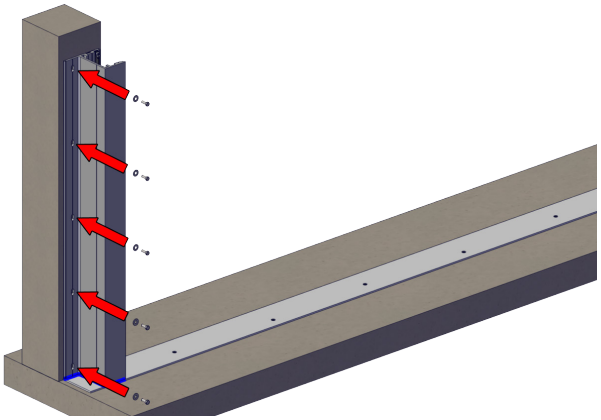

STEP 8. Apply removable sealant to each side of jamb (full height) against existing structure and bottom of jamb (full perimeter) to create a watertight joint.

a. Clean-up excess sealant that could prevent the bottom flood plank gasket from sealing to the sill.

Step 8 Illustration

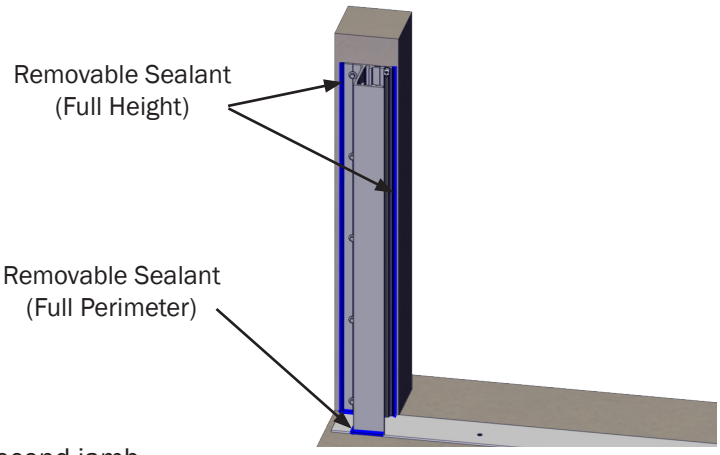

STEP 9. Installation of second jamb

a. Measure from installed jamb to locate second jamb, as shown in Illustration.

b. Repeat Steps 1 through Steps 8 for opposite Jamb. See Approved for Construction Drawings for dimensions.

Step 9 Illustration

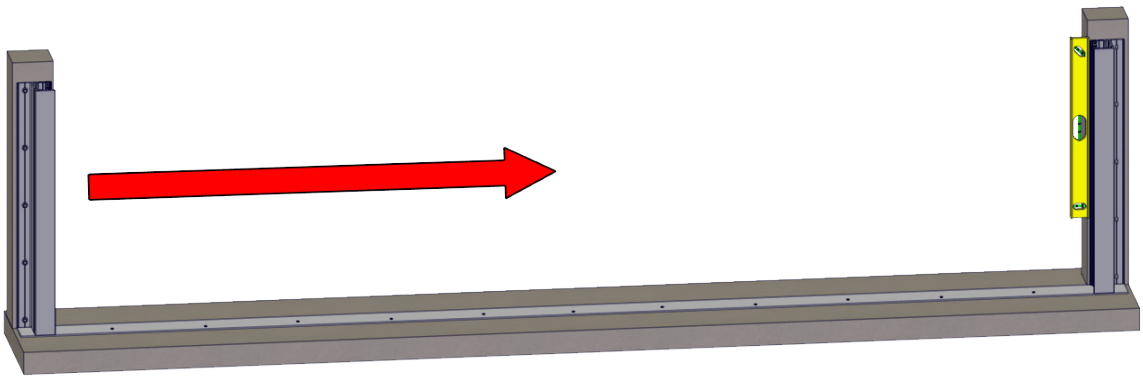

NOTICE PS Flood Barriers recommends completing installation steps fully, testing, and completing a Training Drill for activation prior to storage of Removable Flood Barrier System.

© PS INDUSTRIES INCORPORATED 2018. All Rights Reserved.

Flood Plank Installation

Deployment

XI. Plank Deployment Procedure

NOTICE Operation in a manner other than intended could result in damage or less than acceptable performance at time of need for which the manufacturer will not be held responsible.

NOTE: Conduct Inspection and Maintenance activities as described in this Operation and Maintenance Manual, at a minimum, annually and seasonally if seasonal flood conditions exist, prior to the flood season. This may require the replacement of gaskets, sealants, anchors, and accounting for all of the latching devices.

STEP 1. Remove cover assembly from jambs.

Step 1 Illustration

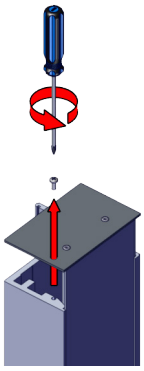

STEP 2. Lube Jamb Seals (recommended to allow flood plank to slide more easily into the jambs)

a. Using a spray bottle filled with a water-dish soap mixture. This may need to be repeated as planks are placed in the jamb. Keep jamb gaskets moist during Flood Plank Deployment.

STEP 3. Remove all debris from sill/gasket sealing surface.

STEP 4. The bottom plank is unique and must be installed first.

a. Locate the flood plank that is labeled "bottom" flood plank, as shown in Illustration A. The ends of the gaskets have been factory sealed to ensure a watertight junction with the sill.

Step 4 Illustration A

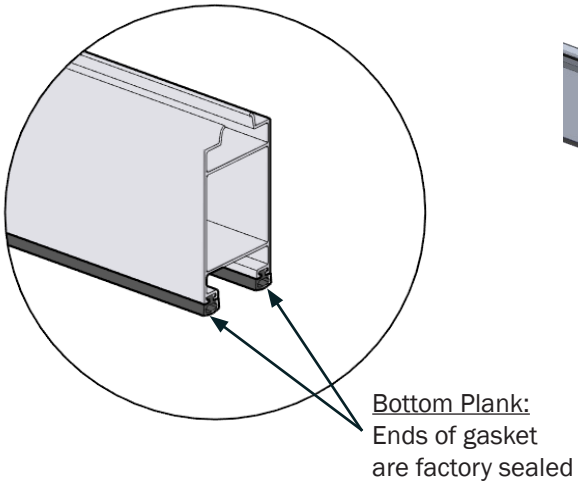

Step 4 Illustration B

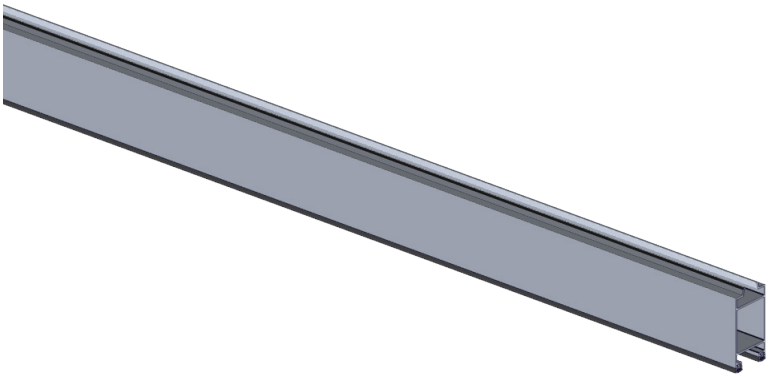

© PS INDUSTRIES INCORPORATED 2018. All Rights Reserved.

Flood Plank Installation

Deployment

STEP 5. Installation of bottom plank.

a. Place one corner of the bottom plank into the bottom corner of the jamb.
b. Angle the opposite end of the plank upward until it clears the opposite jamb.
c. Slide into the jamb, taking care to not tear the jamb gasket.
d. Level plank and slide down to sill/gasket sealing surface.
e. Center plank evenly between jambs, ensuring plank fully overlaps the jamb gasket.

Step 5 Illustration

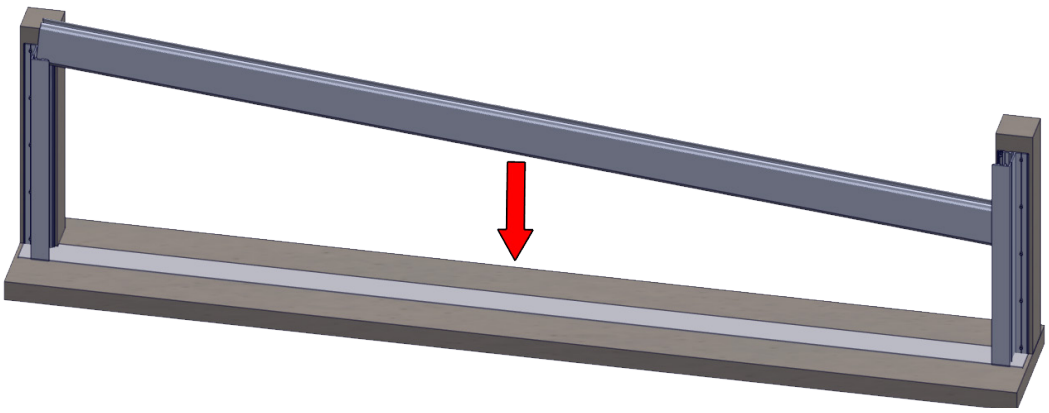

STEP 6. Install intermediate planks in the same manner as the bottom plank, ensuring contact with plank below.

a. Ensure each additional plank is fully seated onto the plank below by inspecting for continuous and uniform plank gasket contact between planks. If this is not achieved; remove and re-install the plank before installing subsequent planks.

Step 6 Illustration A

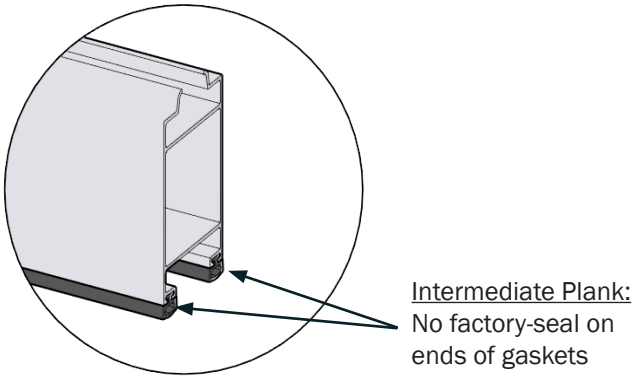

Step 6 Illustration B

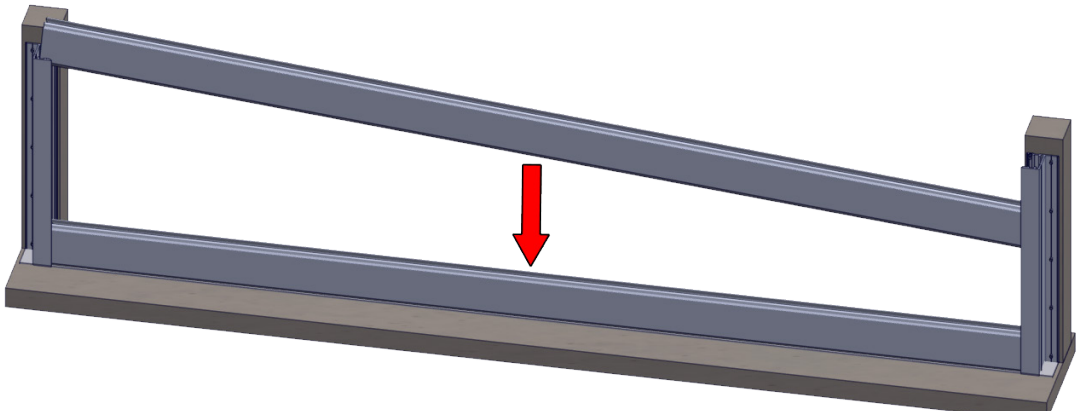

© PS INDUSTRIES INCORPORATED 2018. All Rights Reserved.

Flood Plank Installation

Deployment

STEP 7. Install latching, making certain to tighten both latch sides evenly to compress planks uniformly. Refer to your Approved for Construction Drawings to determine the type of latching supplied for your Flood Plank Barrier.

NOTICE Use of supplied Plank Latch Lock is optional, recommended in locations where tampering of Flood Plank Barrier is prevalent. (Shown in Illustration D and Illustration E)

Step 7 Illustration A

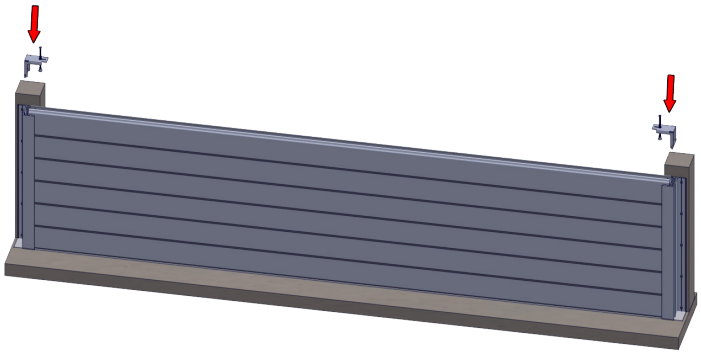

Step 7 Illustration B

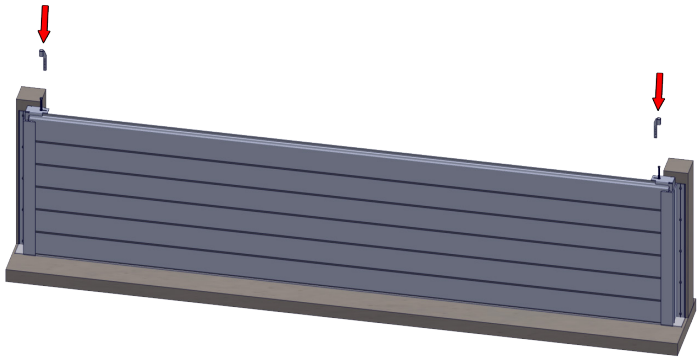

CRITICAL To achieve even gasket compression tighten both latches evenly. At each end of the plank wall, measure from the floor to the top plank to ensure this dimension is with 1/4" while tightening latch to the required torque rating.

NOTE: PS Flood Barriers requires tightening the Latch bolt to a torque of 100 in-lbs for proper plank gasket compression. *Torque wrench supplied by others, NOT PS Flood Barriers.

Step 7 Illustration C

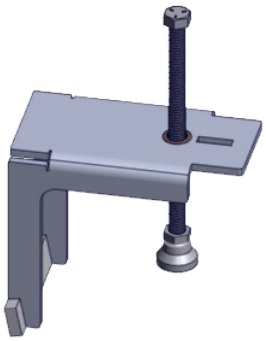

Step 7 Illustration D

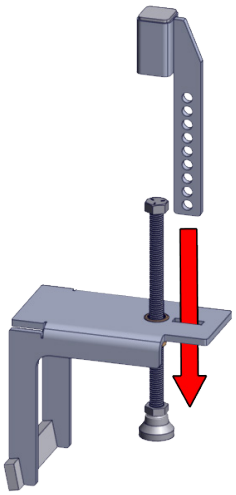

Step 7 Illustration E

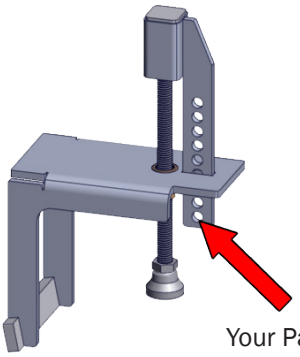

Your Padlock in highest hole below latch.

© PS INDUSTRIES INCORPORATED 2018. All Rights Reserved.

Flood Plank Installation

Removal

XII. Plank Removal Procedure

NOTICE Operation in a manner other than intended could result in damage or less than acceptable performance at time of need for which the manufacturer will not be held responsible.

NOTE: Inspect all components of Flood Plank Wall System before storage, making sure to properly clean and remove contaminants. Contact PS Flood Barriers at 877-446-1519 for purchase of replacement components, if necessary.

STEP 1. If planks have been deployed for an extended period of time, spray/hose water to moisten plank/jamb gaskets prior to removal.
a. Rock back and forth until plank is released from the plank below.
b. Remove plank, taking care not to damage jamb gasket

Step 1 Illustration

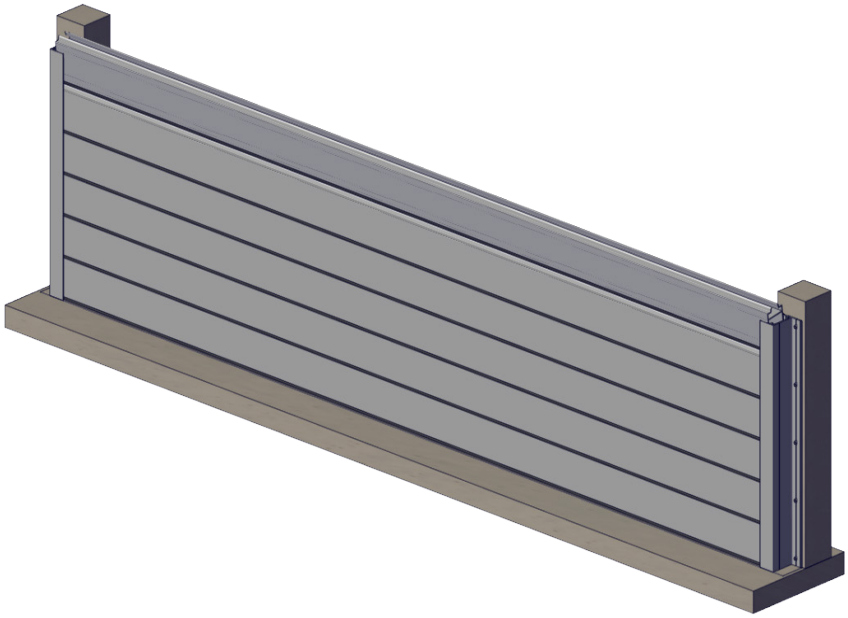

STEP 2. Repeat Step 1 for all remaining planks.

STEP 3. Inspect all gaskets for damage, continuous adhesion to the attached surface, and proper position and compression before storage.

CRITICAL Do not compress gaskets during storage. Store all planks in a way that allows gaskets to be free of contact so the gaskets do not become mis-shaped and unusable.

© PS INDUSTRIES INCORPORATED 2018. All Rights Reserved.

Inspection and Maintenance

XIII. Inspection and Maintenance (Minimum Annually)

A. Sills, Frames, and Embedded items:
1. Inspect items for damage and misalignment. Adjust, repair, or replace as needed, to meet original design tolerances.
2. Check all connections, making sure they meet original design standards (refer to Approved for Construction Drawings and Anchor Specifications).

B. Fasteners and mechanical connections:
1. All fasteners must be in place and adjusted to their original design standards. Replace any damaged components (refer to Approved for Construction Drawings and Anchor Specifications).

C. Sealants and Waterstops:
1. Inspect all sealants used on jambs and connections to insure their effectiveness.
2. Replace any cracked, loose, or otherwise non-performing sealants.
3. Use only factory approved/supplied products.
   a. Permanent Jamb factory approved sealant/waterstops: Sika; Sikaflex-227, Quellpaste Typ E
   b. Removable Jamb factory approved sealant/waterstop: Red Devil, Inc.; Zip-a-Way Removable Sealant

D. Gasketing:
1. Inspect all gaskets for damage, continuous adhesion to the attached surface, and proper positioning and compression.
   a. Inspect all plank gaskets.
   b. Inspect all jamb gaskets as required.
2. Replace or repair if damage or deterioration to gaskets has occurred.
3. Use only factory approved materials (refer to Approved for Construction Drawings).

E. Latching:
1. Operate all latching hardware to ensure smooth, uninhibited movement of all mechanical components.
2. Place flood barrier and check latches for proper engagement. If gaskets are not properly positioned and properly compressed, unlatch barrier panel and adjust latching accordingly.

F. Finishes:
1. Inspect and clean finishes annually.
2. Touch-up repair finishes, or refinish as necessary to protect the structural integrity of the Flood Plank Barrier.

G. Labels and Placards:
1. Inspect all labels and placards.
2. Replace any labels and placards which are unreadable/missing.

H. Housekeeping:
1. Clean sill and jamb of any debris and keep the area clean throughout Flood Plank Wall System opening.

© PS INDUSTRIES INCORPORATED 2018. All Rights Reserved.

Inspection and Maintenance Log

CRITICAL Periodic Inspection and Maintenance Required. Inspect at minimum annually.

Date Purchased: _____

Product: Flood Plank Wall System

Model Number: FP-535

Serial Number: _____

Opening Identifier/ Number: _____

Location: _____

DATE INSPECTED	INSPECTED BY *(Print & Sign)*	INSPECTION ITEMS NOTED	CORRECTIVE ACTION	CORRECTED BY *(Print & Sign)*

© PS INDUSTRIES INCORPORATED 2018. All Rights Reserved.

Rev122618

Inspection and Maintenance Log

CRITICAL Periodic Inspection and Maintenance Required. Inspect at minimum annually.

Date Purchased: _____

Product: Flood Plank Wall System

Model Number: FP-535

Serial Number: _____

Opening Identifier/ Number: _____

Location: _____

DATE INSPECTED	INSPECTED BY *(Print & Sign)*	INSPECTION ITEMS NOTED	CORRECTIVE ACTION	CORRECTED BY *(Print & Sign)*

© PS INDUSTRIES INCORPORATED 2018. All Rights Reserved.

PS FLOOD BARRIER WARRANTY REGISTRATION FORM

PS Flood Barriers™ Product Warranty Registration: For PS Flood Barriers™ Products, the Limited Warranty will only be valid if the Owner completes, and returns, this PS Flood Barrier Warranty Registration Form within thirty (30) days of Product installation.

To request additional copies of the Warranty Registration Form, contact PS INDUSTRIES INCORPORATED, 1150 S. 48th Street, Grand Forks, ND 58201, phone 877-446-1519, email: 4psinfo@psindustries.com. For a fillable form, download a copy from www.psfloodbarriers.com/download-center/

The following information is required:

Owner Name: _____ Product Name: Flood Plank Wall System

Company: _____ Model: FP-535

Address: _____ Serial Number: _____

State/Provence: _____ Date Installed: _____

Zip/Postal Code: _____

Country: _____

Although testing of flood barriers is not required, PS INDUSTRIES INCORPORATED recommends testing flood barriers after installation to verify the suitability of the installation and ensure proper adjustment of flood barrier for optimum performance.

The following information and signatures are required to ensure warranty coverage of installed product.

1. Was the flood barrier field tested after installation? ☐ Yes ☐ No
2. If tested, which type(s) of testing was conducted?
   - ☐ Hose Test per PS Flood Barriers testing procedure.
   - ☐ Hydrostatic Test per PS Flood Barriers testing procedure.
   - ☐ Other Testing Method *(describe below):*

_____

Owner or Installer Name (Please print.)	Test Witness Name (Please print.)
Signature	Signature
Date	Date

Return form to:

PS Flood Barriers
Attention: Warranty
1150 S. 48th Street
Grand Forks, ND 58201

Fax: 701-746-8340
E-mail: 4psinfo@psindustries.com

(Make additional copies as necessary)

Rev. 103018

© PS INDUSTRIES INCORPORATED 2018. All Rights Reserved.

PS INDUSTRIES™
INCORPORATED

PS Access Solutions™
The Ins And Outs Of Industry

PS Safety Access™
We Won't Let You Down

PS Flood Barriers™
Solutions That Hold Water

877.446.1519

4psinfo@psindustries.com | psfloodbarriers.com

1150 South 48th Street | Grand Forks, ND 58201