# HPS-550 CUT SHEET & ORDER FORM

PS DOORS
MANUFACTURING DIVISION

**Toll Free 877-446-1519**
**Phone: 701-746-4519**
**Fax 701-746-8340**
**Website: www.psdoors.com**

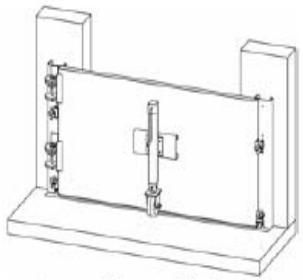

General Assembly Layout

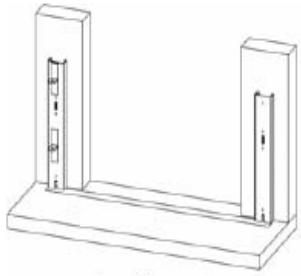

Jamb Layout

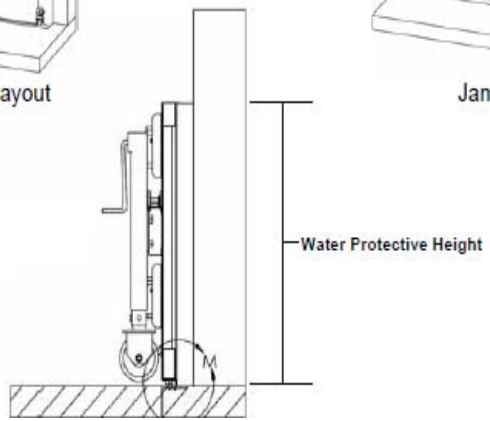


**AVAILABLE SWING DIRECTIONS:**

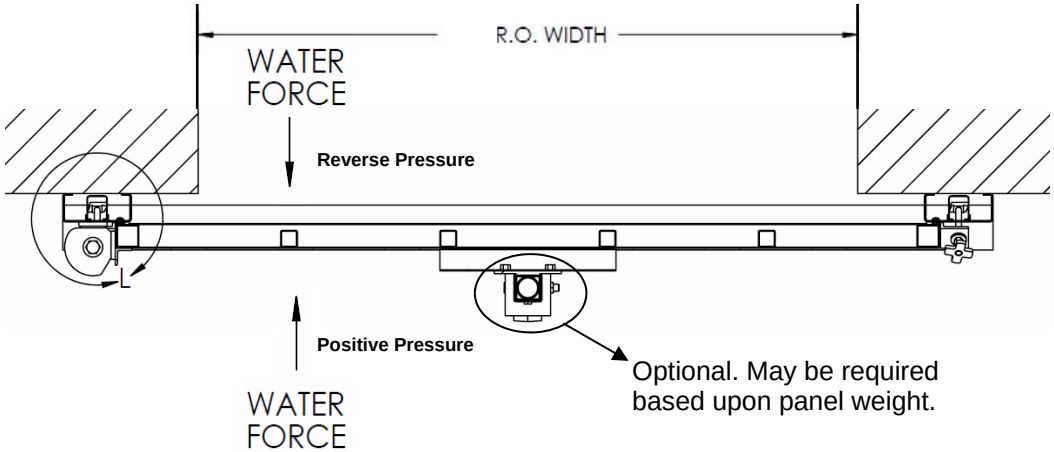


☐ QUOTATION REQUESTED ☐ HS-550 ORDER

**SOLD/QUOTE TO:**

| | |
|---|---|
| Name: | |
| Company: | |
| Address: | |
| City, State, Zip: | |
| Phone: | Fax: |
| E-Mail: | |

**SHIP TO:**

| | |
|---|---|
| Name: | Date: |
| Address: | P.O. #: |
| City, State, Zip | TAG: |
| Phone: | SHIP VIA: |

**PROJECT NAME:**

**QUANTITY:**

**DIMENSIONS:**

Rough Opening Width: Side Clearance Left:

Water Protection Height: Side Clearance Right:

(All Measurements in Inches) (All Measurements in Inches)

**MOUNTING SURFACE:**

☐ CMU
☐ CIP
(Wall Thickness)

**MATERIAL:**

☐ MILD STEEL
☐ ALUMINUM
☐ SST 316 or 304

**WATER FORCE:**

☐ Positive Pressure ☐ Reverse Pressure

Notes:

**CUSTOM DRAWINGS FOR APPROVAL** *If "NO" Approval Drawings are requested, the Name of the person "Declining" approval drawings must be shown below.*

☐ Yes
☐ No

Name Date